WIRELESS WISDOM

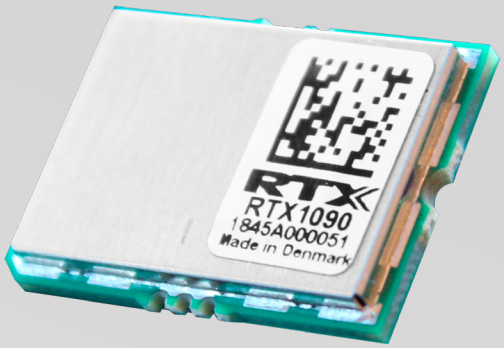

RTX1090

MLM DECT MODULE
W. OPTIONAL SHEERSOUND™
PRODUCT SHEET

The RTX1090 Multi-Level Modulation DECT module is a small, power-efficient, wireless communication module ideally designed to add HD audio and light data service to semi-professional and professional intercom & conference system, as well as high-end microphones and stage equipment.

HIGH-PERFORMANCE DECT MODULE

The RTX1090 module is created with the objective of supporting use cases for professional and semi-professional audio devices like microphones and intercom systems, as well as mission critical communication systems. The module enables customers to develop a high-performance, end-to-end solution without having an extensive knowledge of the DECT radio frequency technology.

A LOOK INSIDE

The RTX1090 is based on a Dialog Semiconductor DA14495 chipset and includes 32 Mbit flash memory (16 or 64 Mbit optional), power regulators and fully-integrated radio transceivers with RF power amplifier, antenna diversity and baseband processor for DECT-based applications using Zero Blind Slot (ZBS) DECT, Multi-Level Modulation, DECT 6.0 CAT-iq, and J-DECT (Japan).

Due to the powerful Tensilica DSP core running at 290 MHz, the RTX1090 can support 2 audio channels using the RTX Sheersound Audio Codec making the module an excellent wireless audio performer. It delivers SNR of up to 89 dB, a dynamic range of up to 128 dB, frequency response of 10 Hz to 22 kHz and an ignorable latency of 20 µs from the Codec itself and a maximum latency of less than 7 ms for the complete system which is unprecedented for a DECT solution.

RTX already offers Zero Blind Slot in its RTX1070/71 module, but the RTX1090 adds Multi-Level Modulation (MLM) which provides increased density and spectral efficiency resulting in even higher data rates than any previous DECT modules. With the radio band pass filter, it is ensured that out of band LTE radios do not inflict interference which adds to the extreme of the radio link. The RTX1090 is designed for power efficiency but also supports, as an option, Ultra Low Energy (ULE) thus making the module an obvious choice for product requiring low power consumption. Furthermore, the very small form factor of RTX1090 makes very compact solutions possible.

MULTI LEVEL MODULATION

Most standard DECT radios only support one modulation form (GFSK), but the DECT standard defines a few additional modulation forms, hence providing a higher bit rate. The RTX1090 module supports multi-level modulation up to D8PSK for bit rates from 1.152 to 3.456 Mbit/s. Some of the supported modulation forms are as follows: GFSK (-91 dBm), DBPSK (-94 dBm), DQPSK (-90 dBm), and D8PSK (-85 dBm) - (sensitivity on the module antenna input pin).

AES128 AND 256

The RTX1090 module has hardware support for AES128/256 encryption, allowing your solution to provide even better security than the DECT standard prescribes.

END-TO-END SOLUTION WITH ONE MODULE

An end-to-end solution can be designed using the RTX1090 module without any host controller. The module requires only a motherboard with antenna(s) and power supply in its basic form.

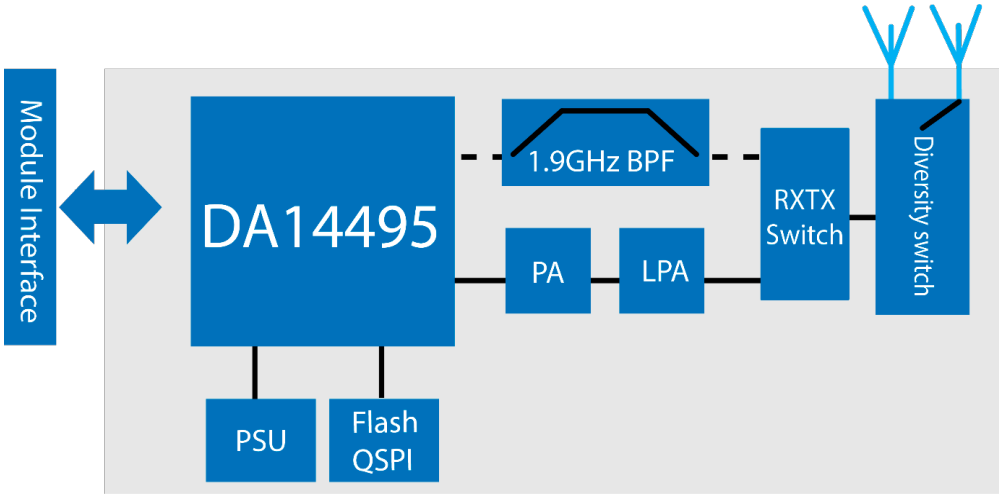

Figure 1: RTX1090 module components

APPLICATION EXAMPLES

The RTX1090 module is primarily targeted for HD audio applications and low-bandwidth data. Due to its flexibility, the RTX1090 module can be used for a large range of high-end wireless applications.

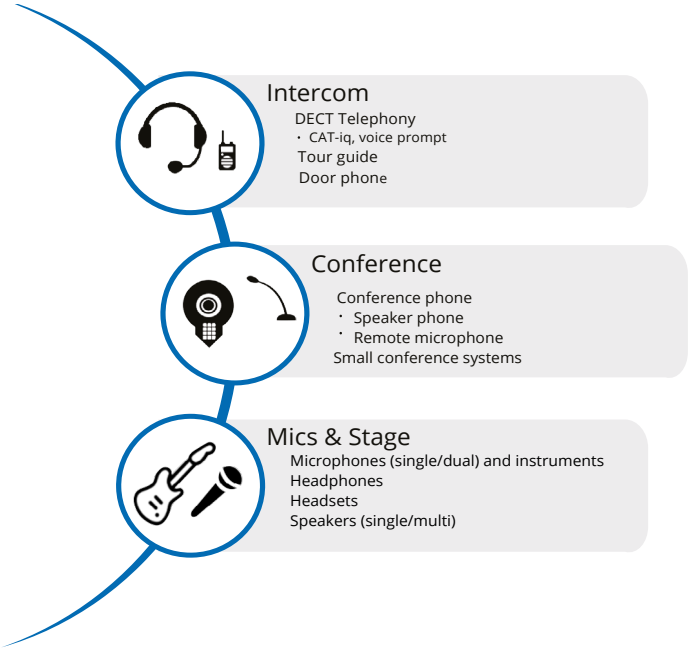

Figure 2: RTX1090 application examples

MANUFACTURING INTEGRATION

The RTX1090 modules are delivered pre-tested on Tape & Reel and flash-loaded with a dedicated firmware in your manufacturing facility. The firmware is either a derived configuration of one of our standard platforms 1, or a more tailored design created to match your exact requirements.

Platform options spread across traditional DECT/CAT-iq applications (headsets, handsets, modems, routers etc.) to semi-professional audio for mics & stage and high-end inter-com solutions with specific focus on audio quality, latency, and system capacity. Contact us regarding your exact software needs, and we will find a good solution.

Having the programming done in your manufacturing brings you maximum flexibility and the ability to adapt immediately to changing market needs. This simplifies logistics to the benefit of product manufacturers and end users.

The module has a variety of external interfaces and is designed to relieve design efforts by minimizing the need of external components. You can find the list of interfaces in the technical specifications.

An evaluation board is available with full pin-out exposed on connectors as well as add-on codec boards. This minimizes the effort when building Proof-of-Concept prototypes early in the design process.

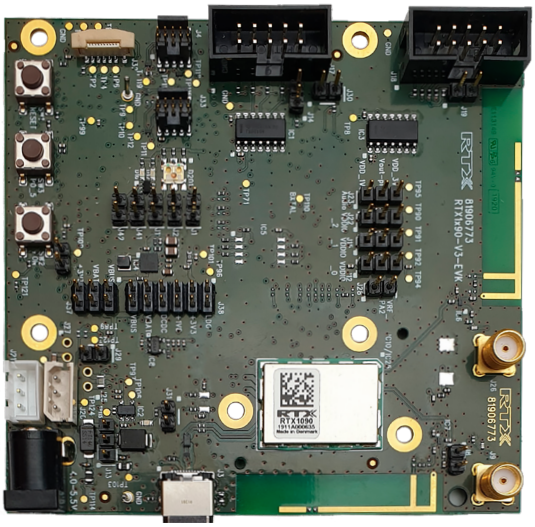

Figure 3: RTX1x90EVK mounted with RTX1090

TECHNICAL SPECIFICATIONS

SUPPORTED COMPLIANCE	SPECIFICATIONS
PROTOCOLS*	• DECT GAP, DECT 6.0, J-DECT ARIB STD-T101 • CAT-iq v1, v2 and v3 compliant features • 1880 – 1900 MHz (Europe) • 1920 – 1930 MHz (USA & Canada) • 1893.5 – 1906.1 MHz (Japan)
EU STANDARDS*	• Radio: ETSI EN 300 406, ETSI EN 300 175 • EMC: EN 301 489-6, EN 301 489-1 • Safety: IEC/EN 60950-1: 2010 • RoHS: 2002/95/EC • SAR: EN 50385
US STANDARDS*	• Radio & EMC: FCC Part 15, subpart D. (1920 – 1930 MHz) • SAR: FCC guideline (OET bulletin 65 suppl.c: 2001)
JAPAN STANDARDS*	• Radio & EMC: ARIB STD T-101, TELEC-T254 • SAR: ICNIRP
FEATURES	**SPECIFICATIONS**
SIMULTANEOUS CONNECTIONS*	• Up to 10.
CODECS*	• Full codec negotiation in accordance w/ CAT-iq spec. can be applied • SheersoundTM (160-212 kbit/s) • G722 (64 kbit/s voice service) • ADPCM G726 (32kbit/s voice service) • CELT 4.0 • PAEC 6.0
STANDARD SOFTWARE PACKAGES AVAILABLE*	• Sheerlink™ :Pro Audio wireless microphones & instruments, headsets, and headphones • Cordless Voice: DECT telephony (CAT-iq compliant) and professional conference systems • Wireless Audio: High-end public address & tourguide (1024 receivers)
EXTERNAL INTERFACES*	• Digital Interfaces • USB 2.0 HS/FS Device/Host MAC/PHY with DMA • 41 I/O pads with state retention and slope control • Dual UART full duplex 9.6 kBd to 812.5 kBd with FIFO and DMA support • Dual SPI+™ interface 20.736 MHz (master/slave) • I2C interface 100 kHz, 400 kHz, 1.152 MHz (M/S) • Dual PCM+ interface, M/S, 2 x 32 bits, 196 kHz, I2S • Three stereo PDM I/O for digital microphones • Analog Interfaces • 2 input 10-bit ADC, single-ended/differential
GENERAL DATA	**SPECIFICATIONS**
PHYSICAL CHARACTERISTICS	• 15.4 x 21.6 mm • Single-sided PCB assembly • LGA mounting
SUPPLY RANGE	• 2.1 - 3.45 V using normal operation • 3.1 - 3.45 V using the Zero Blind Slot operation
POWER CONSUMPTION	Active radio – minimum values:
IDLE MODE, TYPICAL* TALK MODE, TYPICAL*	• FP 12 mA / PP 13 mA • FP 38 mA / PP 32 mA (4 out of 24 available slots used (Dual Slot))
ENVIRONMENTAL CONDITIONS	**SPECIFICATIONS**
OPERATING TEMPERATURE RANGE	• -20 °C to 60 °C
HUMIDITY	• 30-95%, non-condensing
ORDERING DETAILS	**DESCRIPTION**
RTX1090 MLM DECT MODULE	Contact RTX for more details and offer at sales@rtx.dk

*Software dependent